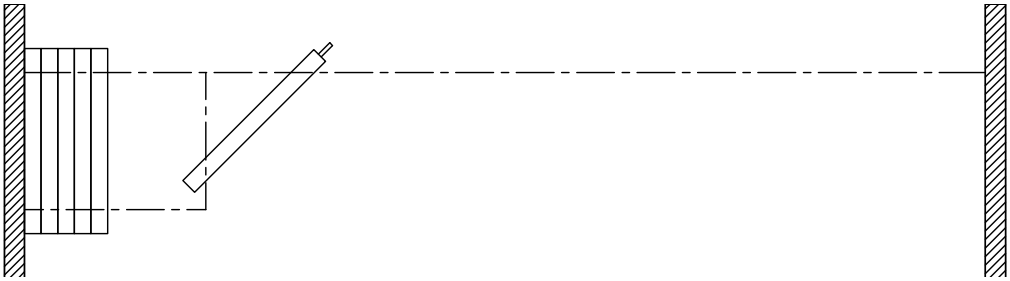

CRYSTAL 241 - 1812_0

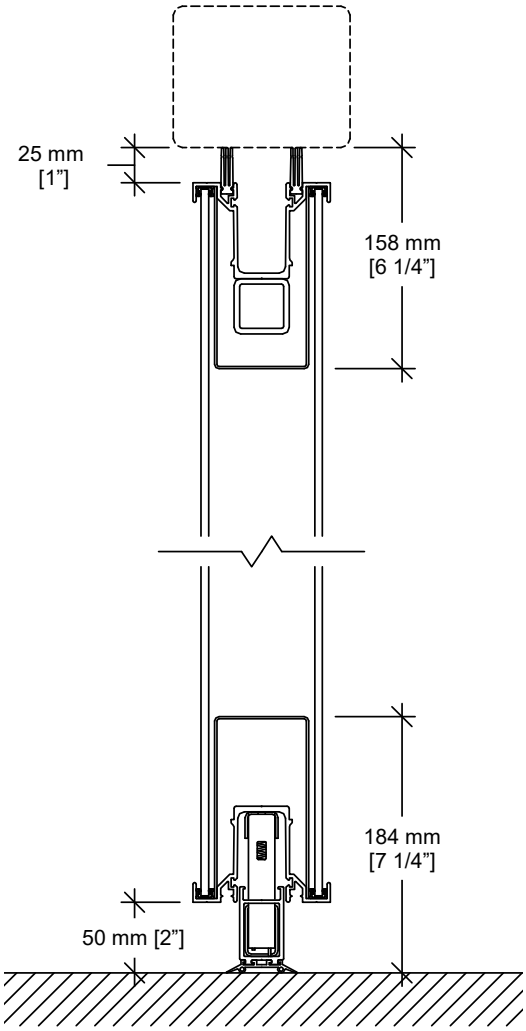

CRYSTAL 241 - 1812_0

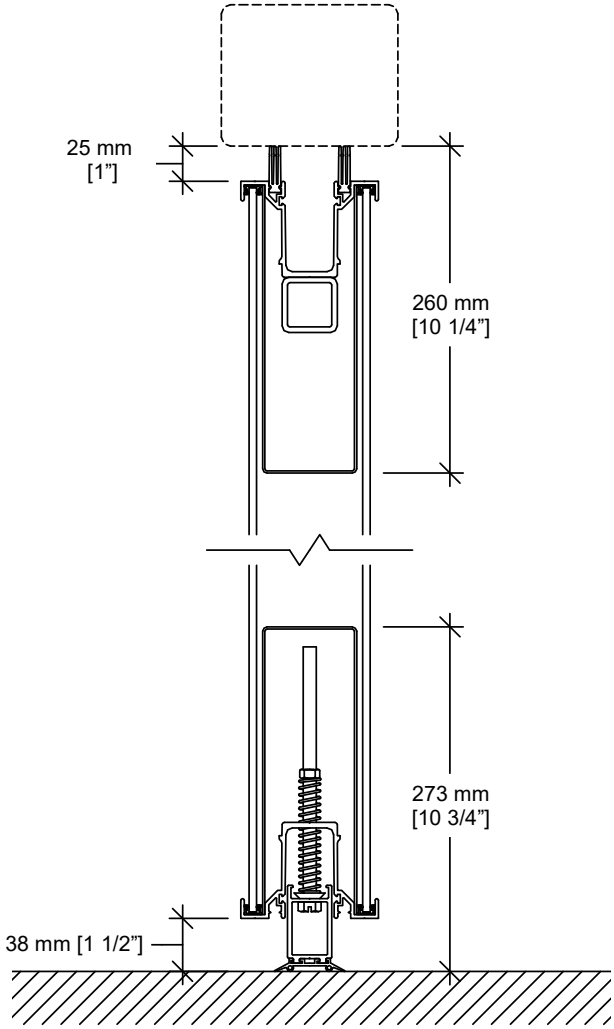

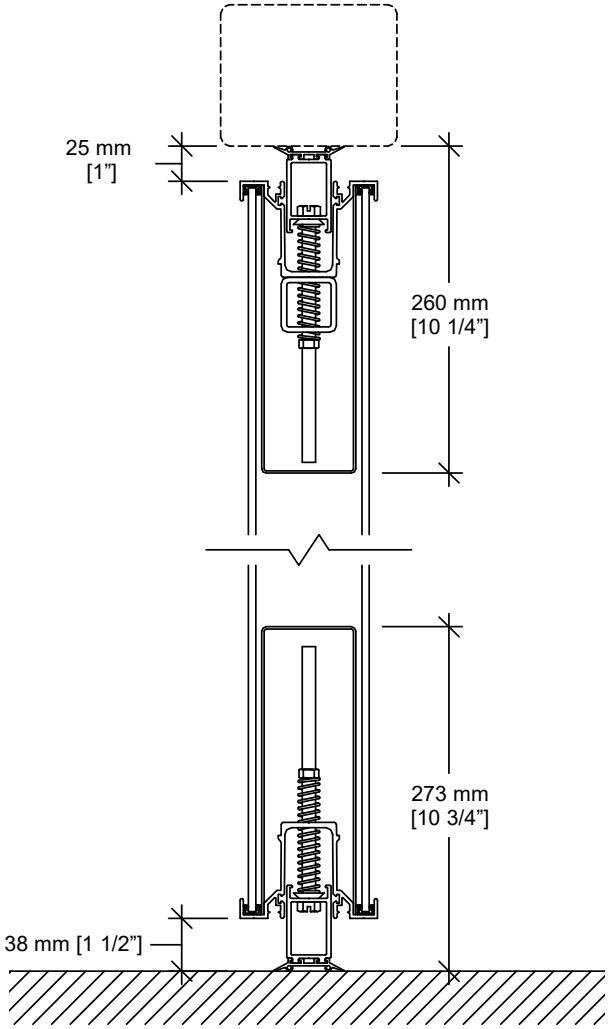

CRYSTAL 241 - 1812_0

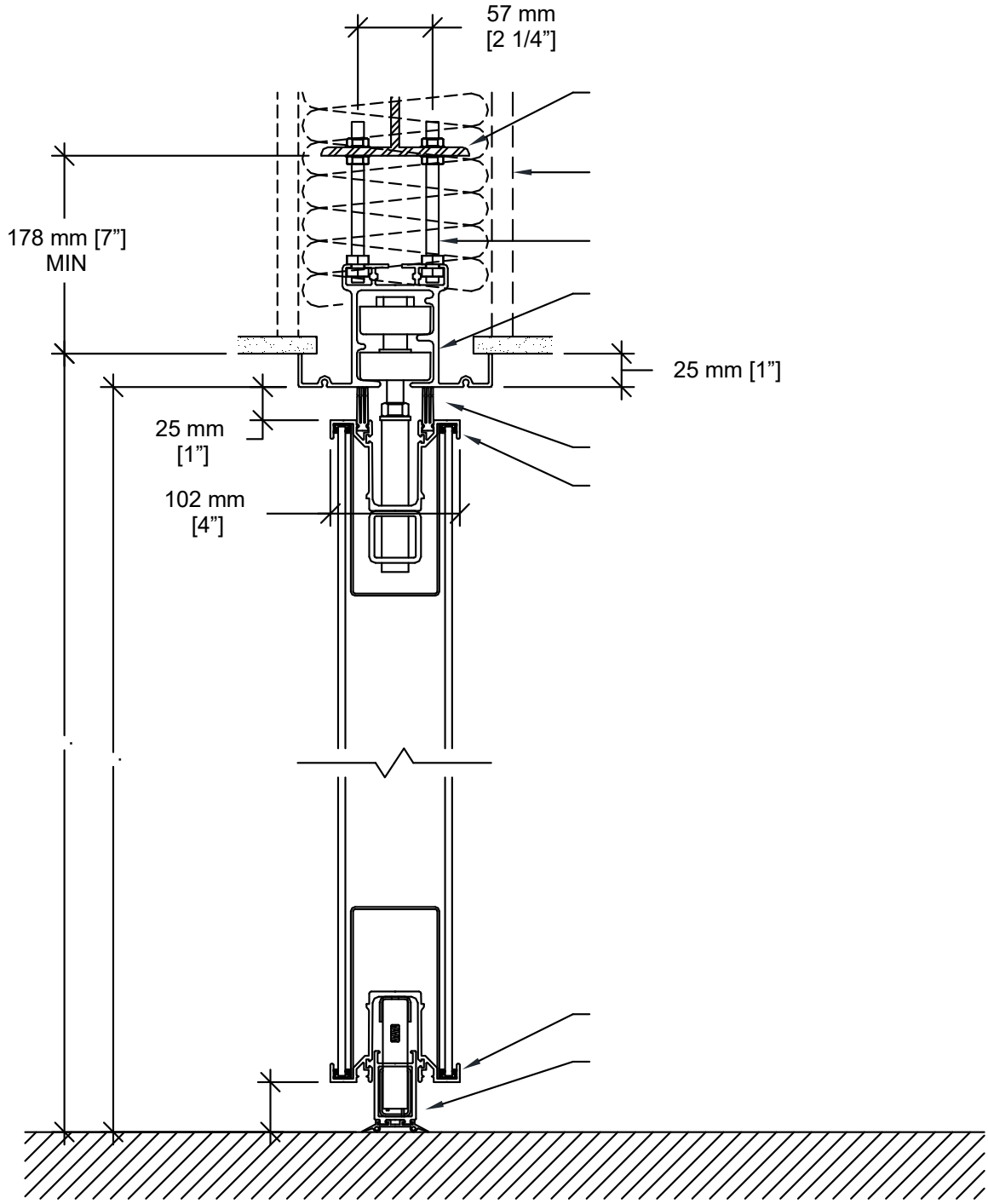

CRYSTAL 241 - 1812_0

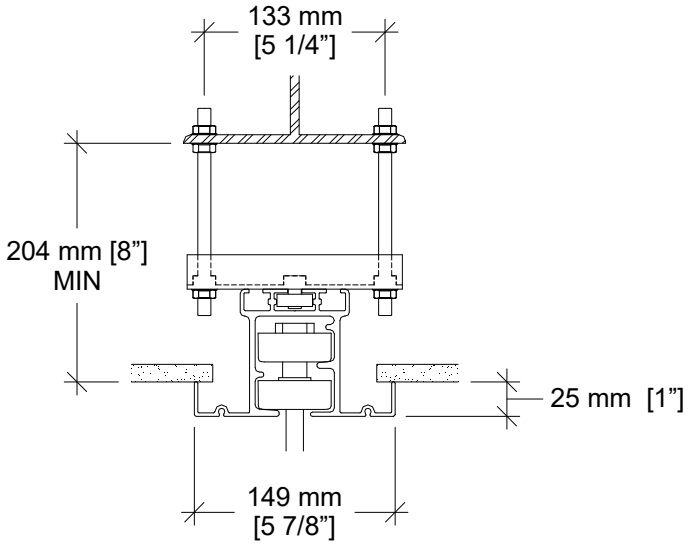
133 mm
[5 1/4”]
204 mm [8”]
MIN
25 mm [1”]
149 mm
[5 7/8”]

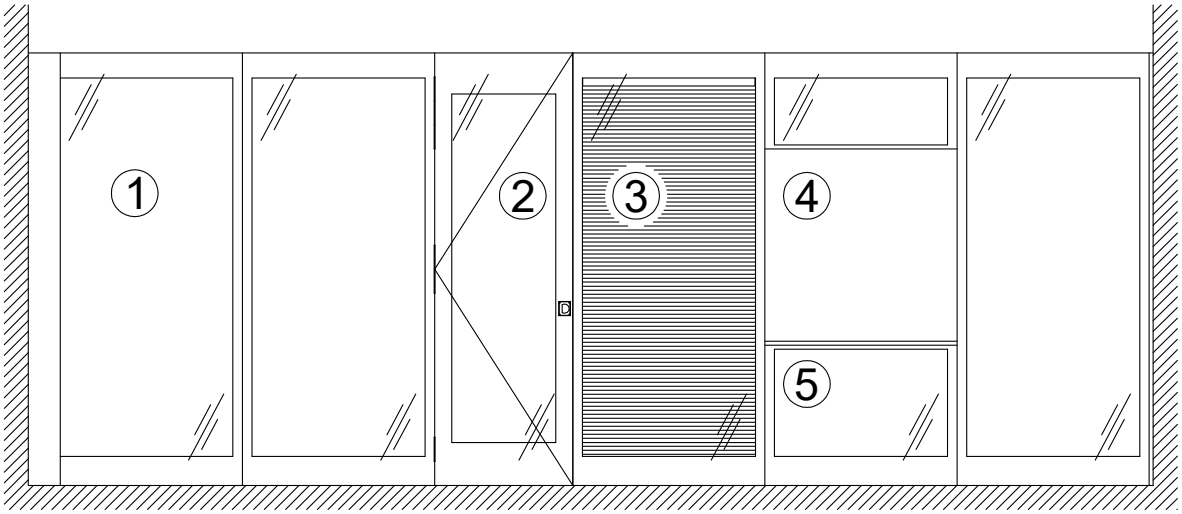

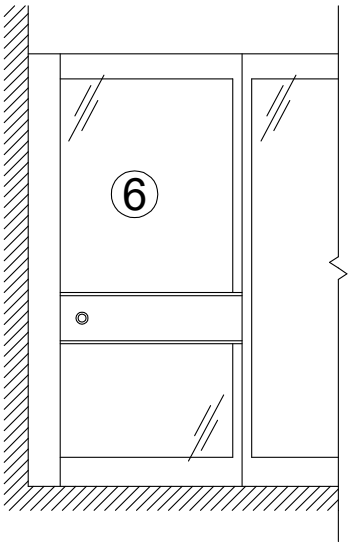

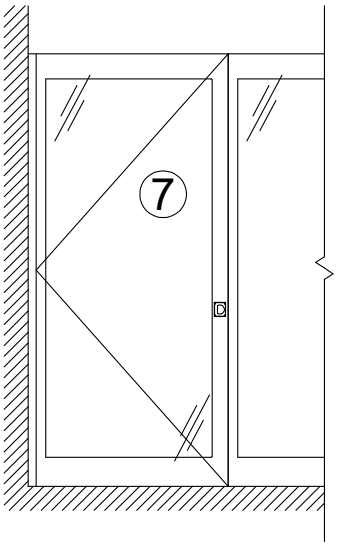

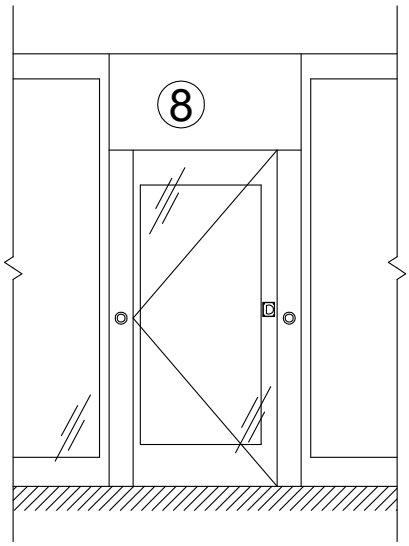

CRYSTAL 241 - 1812_0

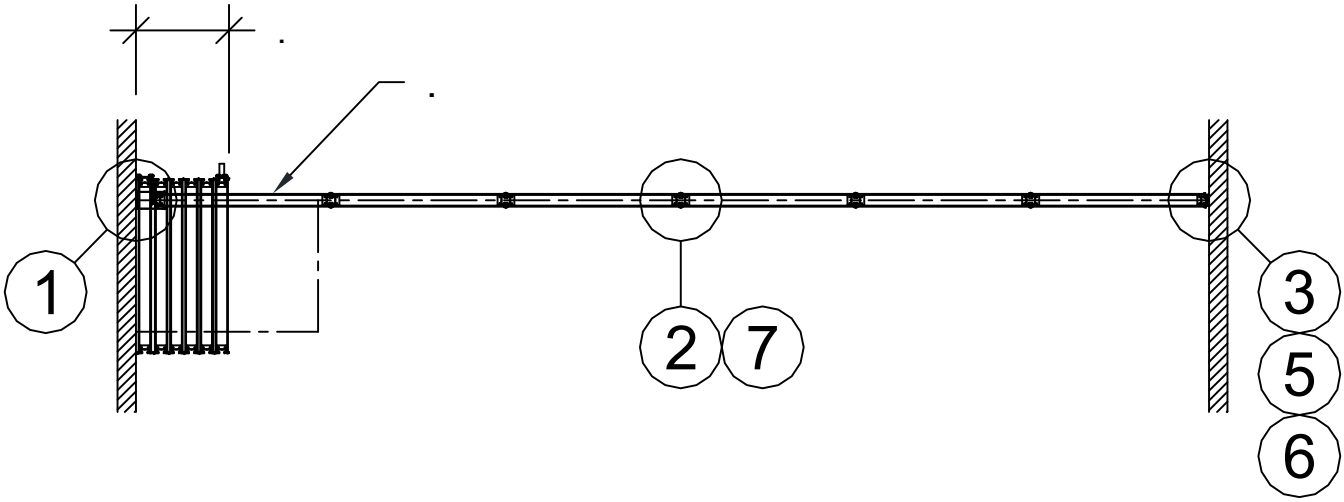

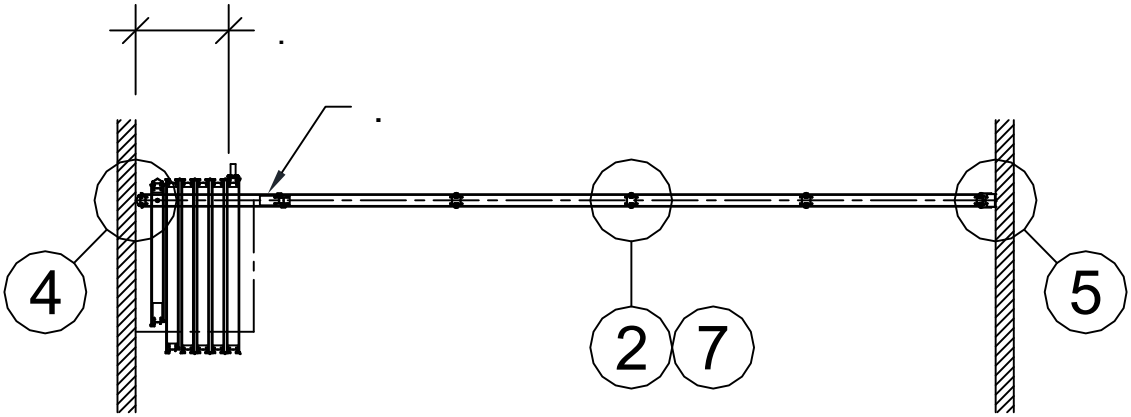

CRYSTAL 241 - 1812_0

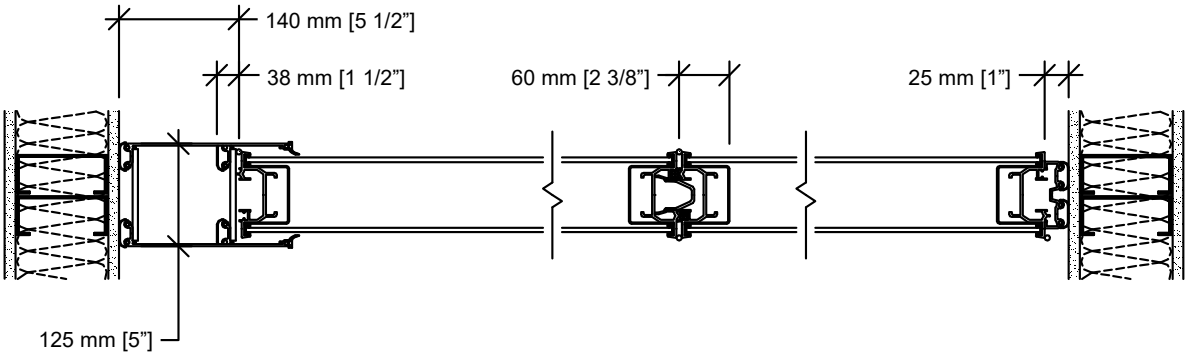

1 2 3

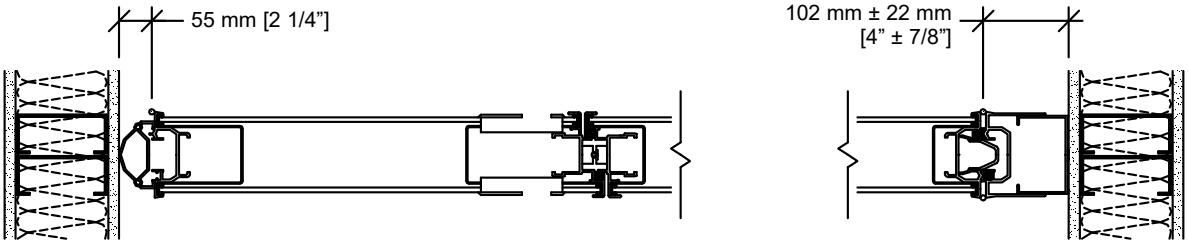

4 5

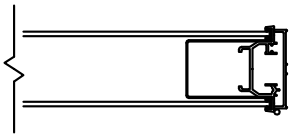

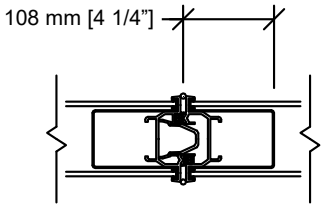

6 7

CRYSTAL 241 - 1812_0

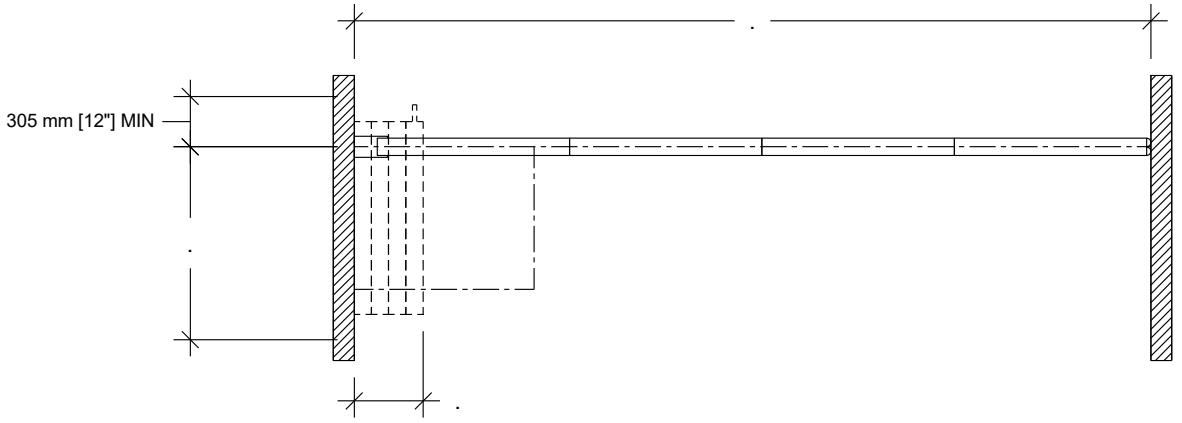

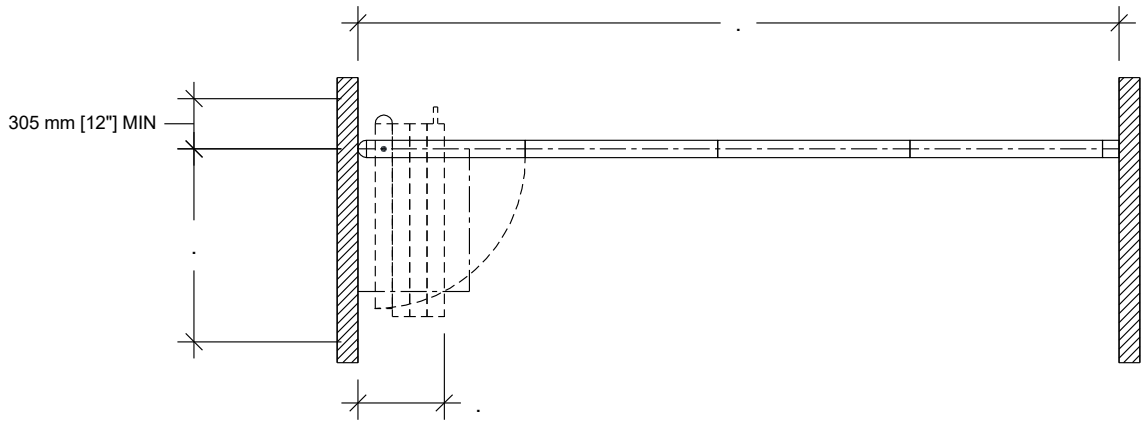

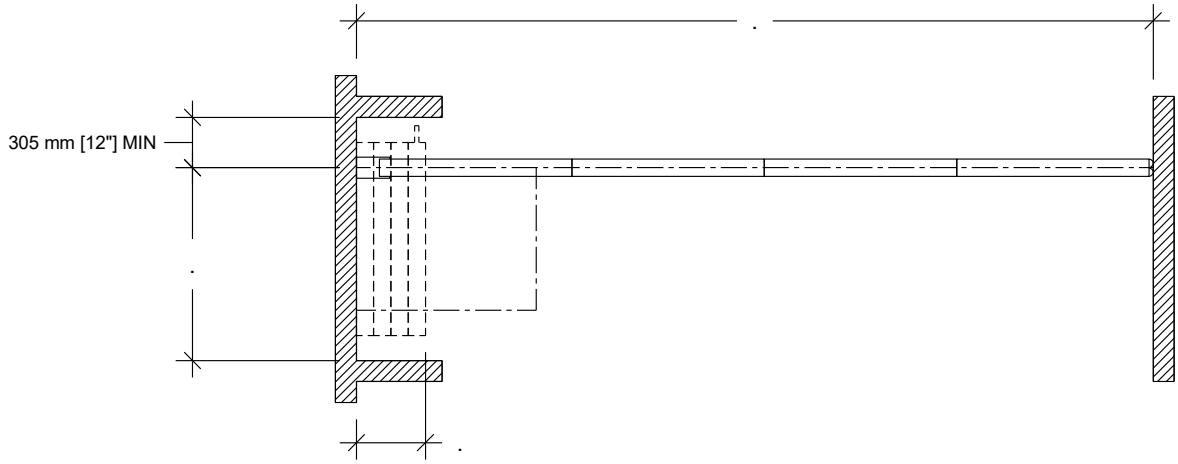

CRYSTAL 241 - 1812_0

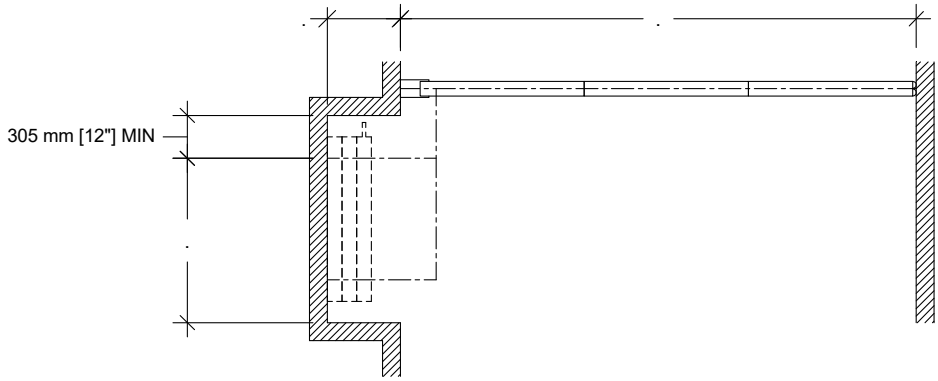
305 mm [12"] MIN

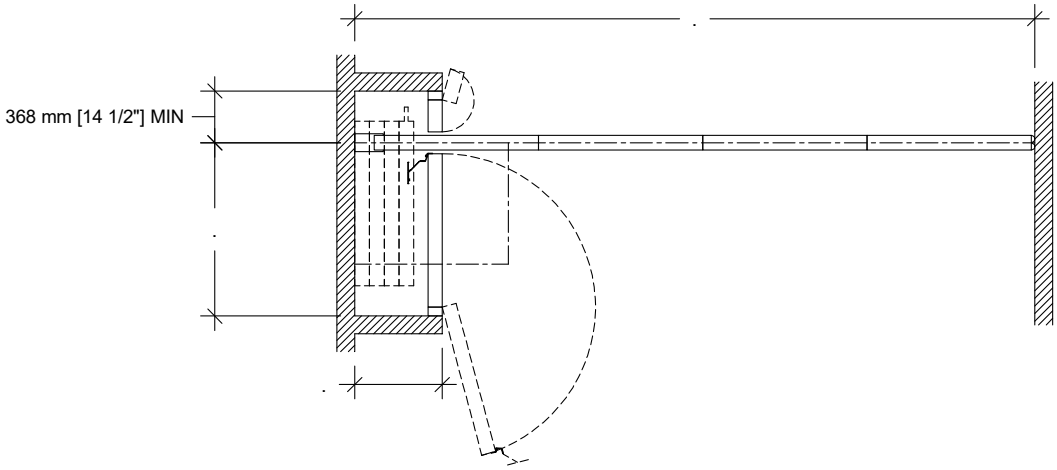
368 mm [14 1/2"] MIN

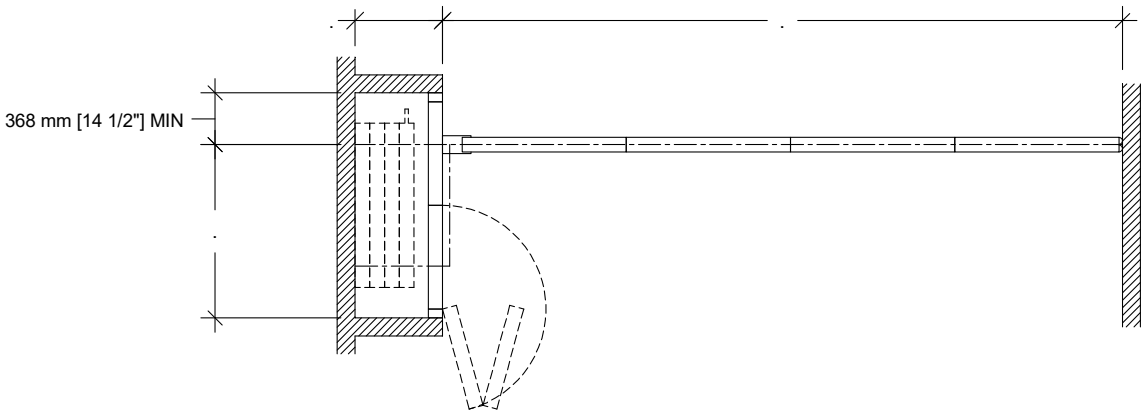
368 mm [14 1/2"] MIN